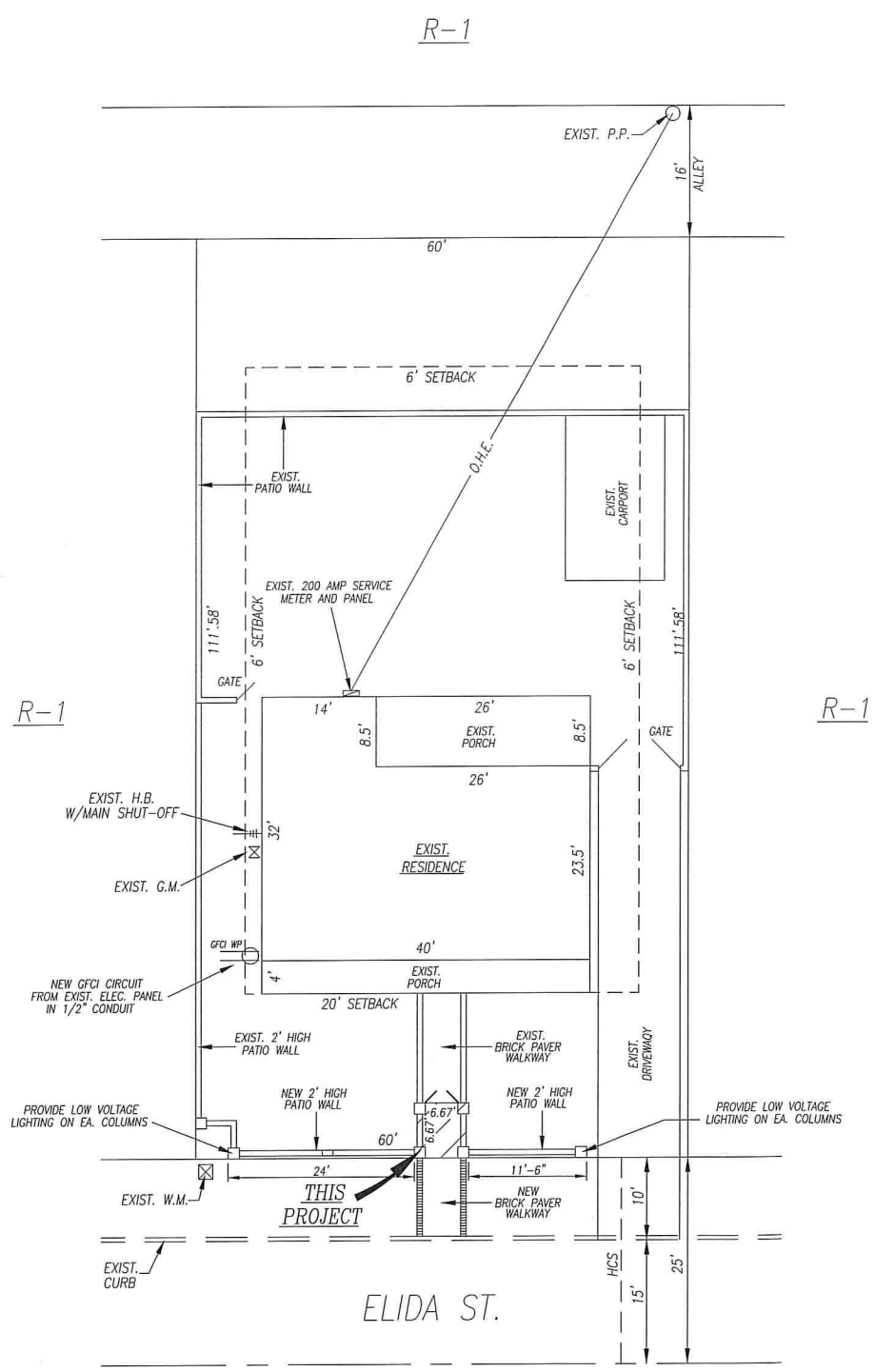


## SITE PLAN

SCALE: 1"=10'-0"

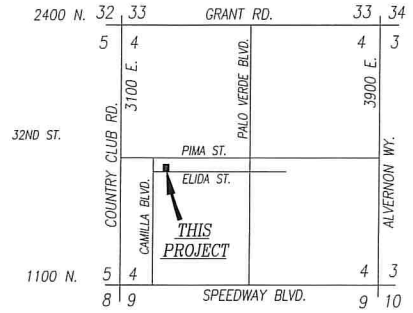


## LOCATION MAP

SEC. 4 T.14S., R.14E.
SCALE: 3"= 1 MILE

NOTES:

CONTRACTOR TO VERIFY ALL UTILITIES PRIOR TO CONSTRUCTION
CONTRACTOR TO RESTORE ALL VEGETATION AS NEEDED.
CONTRACTOR TO VERIFY EXIST. GRADE PRIOR TO CONSTRUCTION.

## LOT DESCRIPTION

ADDRESS : 3219 E. ELIDA ST., TUCSON, ARIZONA 85711, PIMA COUNTY
RESIDENCE OF: DUANE R. VILD
SECTION 4 , TOWNSHIP 14 SOUTH, RANGE 14 EAST
JONES E2 LOT 7 EXC N140' & S25' BLK 14
ZONNG: R-1
LOT AREA = 6,695 SQ.FT.

## TOTAL LOT COVERAGE

| | | |
|---|---|---|
| ZONING IS: | R-1 | |
| SQUARE FOOTAGE OF LOT= | 6,695 | SQ. FT. |
| SQUARE FOOTAGE OF EXISTING DWELLING(S)= | 1,059 | SQ. FT. |
| SQUARE FOOTAGE OF EXISTING ACCESSORY STRUCTURE(S)= (PORCHES) | 381 | SQ. FT. |
| SQUARE FOOTAGE OF EXISTING VEHICULAR USE AREA (CARPORT)= | 240 | SQ. FT. |
| SQUARE FOOTAGE OF EXISTING VEHICULAR USE AREA (DRIVEWAY)= | 700 | SQ. FT. |
| SQUARE FOOTAGE OF NEW ACCESSORY STRUCTURE= (FRONT YARD COVER ENTRY) | 45 | SQ. FT. |
| TOTAL LOT COVERAGE(SQUARE FOOTAGE OF BUILDINGS AND VEHICULAR USE AREAS)= | 2,425 | SQ. FT. |
| PERCENT LOT COVERAGE(TOTAL LOT COVERAGE S.F. DIVIDED BY THE S.F. OF LOT)= | 36% | |
| MAXIMUM HEIGHT OF NEW STRUCTURE(S)= | 11'-0" | |

HEIGHT OF EXTERIOR WALLS FOR NEW BUILDING(S) OR ADDITION(S):
NORTH: 8'-0" FEET HIGH
SOUTH: 8'-0" FEET HIGH
EAST: ------ FEET HIGH
WEST: 11'-0" FEET HIGH

## SHEET INDEX

1. SITE PLAN
2. FOUNDATION PLAN
FLOOR PLAN
FRAMING PLAN
ELEVATIONS
SECTION DETAILS

3219 E. Elida St.
Tucson, Arizona 85711

NEW FRONT YARD COVER ENTRY FOR : DUANE R. VILD

SITE PLAN

SHT. 1 2 OF

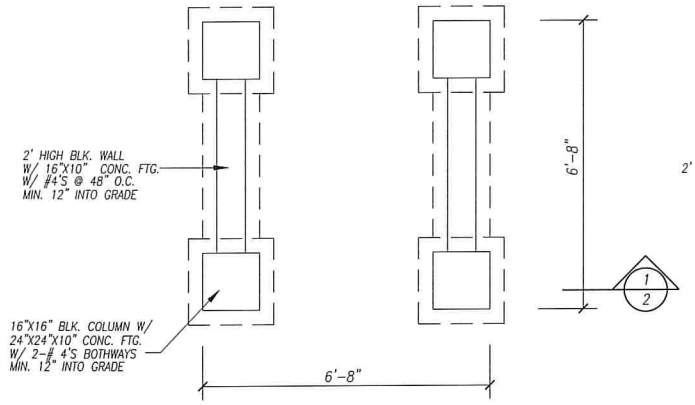


## FOUNDATION PLAN

SCALE: 1/2"=1'-0"

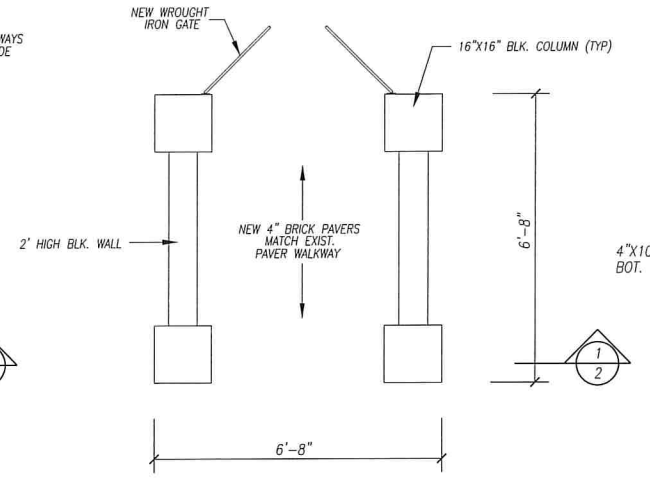


## FLOOR PLAN

SCALE: 1/2"=1'-0"

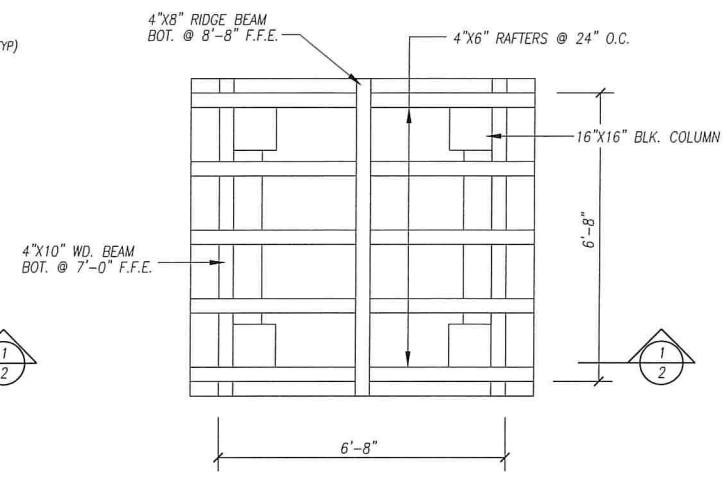


## FRAMING PLAN

SCALE: 1/2"=1'-0"

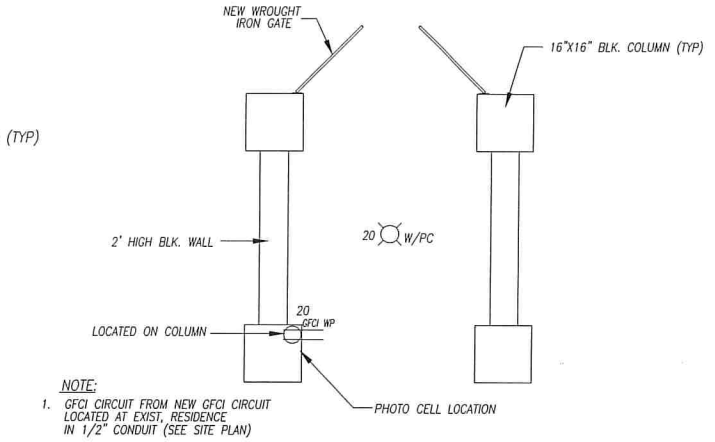


## ELECTRICAL PLAN

SCALE: 1/2"=1'-0"

### FOUNDATION NOTES:

1. ALL WORK TO BE DONE IN ACCORDANCE WITH THE 2012
2. CONCRETE TO HAVE BEARING CAPACITY OF 2500 P.S.I.
3. SOIL UNDER SLAB TO BE MIN. 4" COMPACTED SUBGRADE
4. ALL FOUNDATIONS SHALL BEAR A MINIMUM OF 12 INCHES INTO NATURAL EXISTING SOIL WITH A MINIMUM SOIL BEARING PRESSURE OF 1500 P.S.F. (TABLE R401.4.1)

### CONSTRUCTION NOTES:

1. ALL WORK TO BE DONE ACCORDING TO STANDARDS SET BY 2012 IRC
2. 4"X BEAMS AND RAFTERS
3. NAILING TO COMPLY WITH TABLE R602.3(1) OF THE 2012 IRC
4. NEW 16"X16" BLOCK COLUMNS
5. DO NOT USE SCALED DIMENSIONS, USE WRITTEN DIMENSIONS OR WHERE NO DIMENSIONS IS GIVEN CONSULT THE DESIGNER OR OWNER FOR CLARIFICATION BEFORE PROCEEDING WITH THE WORK

### FRAMING NOTES:

1. ALL FRAMING & ANCHORING SHALL BE PER 2012 IRC NAILING PER TABLE R602.3(1) METAL CONNECTORS, HANGERS & TIES TO BE "SIMPSON STRONG – TIE" OR APPROVED EQUAL
2. NEW 16"X16" BLK. COLUMNS AND 2' HIGH BLK. WALL
3. ALL STRUCTURAL LUMBER TO BE #2 WCDF OR BETTER POSTS & BEAMS #1 DF.

ROOF FRAMING:

ROOF PLYWOOD OR OSB SHEATHING PANEL EDGES SHALL BEAR ON FRAMING MEMBERS AND BUTT ALONG THEIR CENTERS LINES WITH PANEL EDGES STAGGERED AND FACE GRAIN PERPENDICULAR TO SUPPORT

### STRUCTURAL LOAD VALUES

| | |
|---|---|
| SOIL BEARING: | 1500 PSI @ 12" DEPTH IRC-TABLE R401.4.1. |
| ROOF DEAD LOAD: | 15 PSI |
| ROOF LIVE LOAD: | 20 PSI |

### ELECTRICAL LEGEND

| | |
|---|---|
| GFCI WP | GROUND FAULT OUTLET (WHEATHER PROOF) |
| W/PC | CEILING LIGHT W/PHOTO CELL |
| PANEL | ELECTRICAL PANEL/METER (SEE SITE PLAN) |

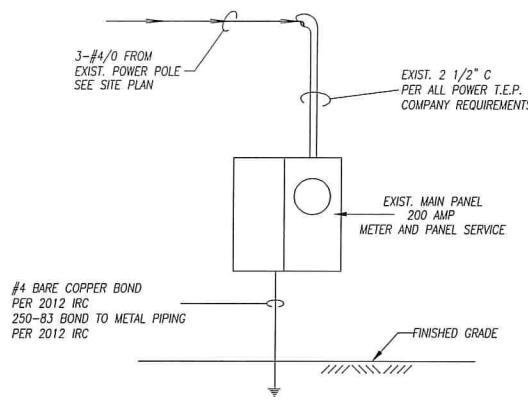


## RISER DIAGRAM

NOT TO SCALE

EXIST. PANEL

BUS 10 3 WIRE, 200A MB, 1 PHASE 120/240V
10,000 A.I.C. SURFACE MOUNTED,RAIN TIGHT

| # | DESCRIPTION | BRKR. | WIRE | | BRKR. | DESCRIPTION | # |
|---|---|---|---|---|---|---|---|
| 1 | EXIST. A/C | 2/50 | 6 | 6 | 2/50 | EXIST. RANGE | 2 |
| 3 | | | | | | | 4 |
| 5 | EXIST. DRYER | 2/30 | 8 | 14 | 1/15 | RECEPTACLES | 6 |
| 7 | | | 14 | | 1/15 | RECEPTACLES | 8 |
| 9 | LIGHTS | 1/15 | 14 | 12 | 1/20 | WASHER | 10 |
| 11 | | 1/15 | 14 | 12 | 1/20 | KITCHEN | 12 |
| 13 | | 1/15 | 14 | 12 | 1/20 | KITCHEN | 14 |
| 15 | RECEPTACLES | 1/15 | 14 | 12 | 1/20 | DISPOSAL | 16 |
| 17 | GFCI RECEPT. | 1/15 | 14 | 12 | 1/20 | DISHWASHER | 18 |
| 19 | | | | 12 | 1/20 | OUTSIDE GFCI | 20 |
| 21 | | | | | | | 22 |

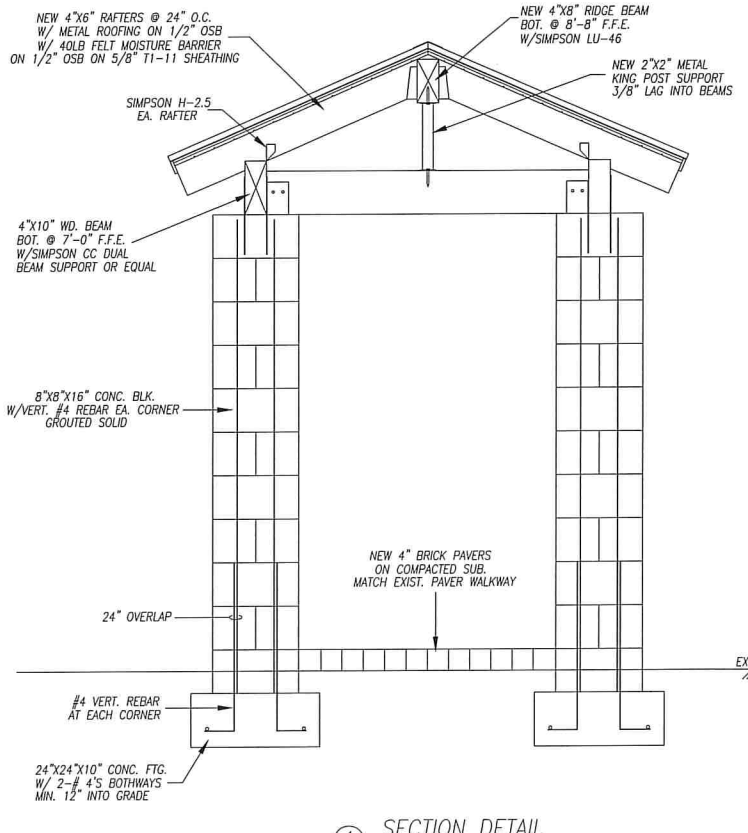


1 SECTION DETAIL

SCALE: 3/4"=1'-0"

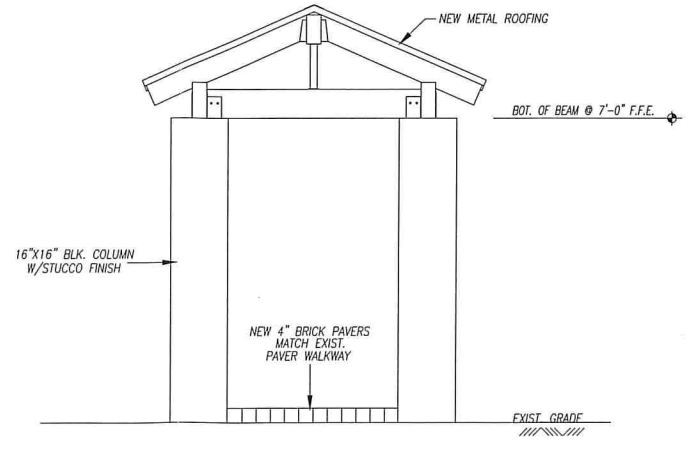


## NORTH & SOUTH SIDE ELEVATION

SCALE: 1/2"=1'-0"

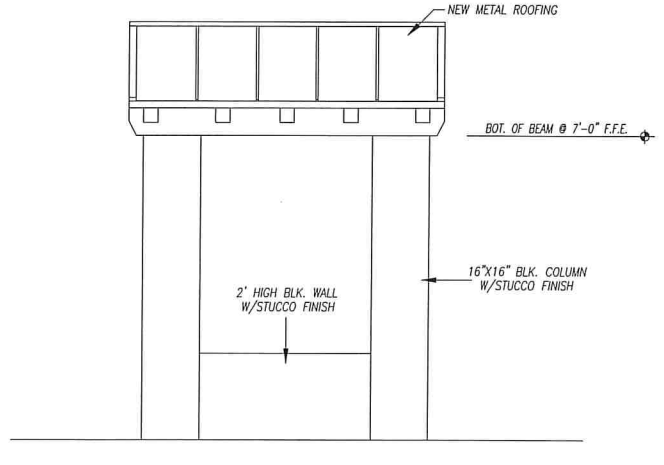


## EAST & WEST SIDE ELEVATION

SCALE: 1/2"=1'-0"

3219 E. Elida St.
Tucson, Arizona 85711

NEW FRONT YARD COVER ENTRY FOR : DUANE R. VILD

FOUNDATION, FLOOR, & FRAMING PLAN
ELECTRICAL, ELEVATIONS AND SECTION DETAIL

SHT. 2 2 OF