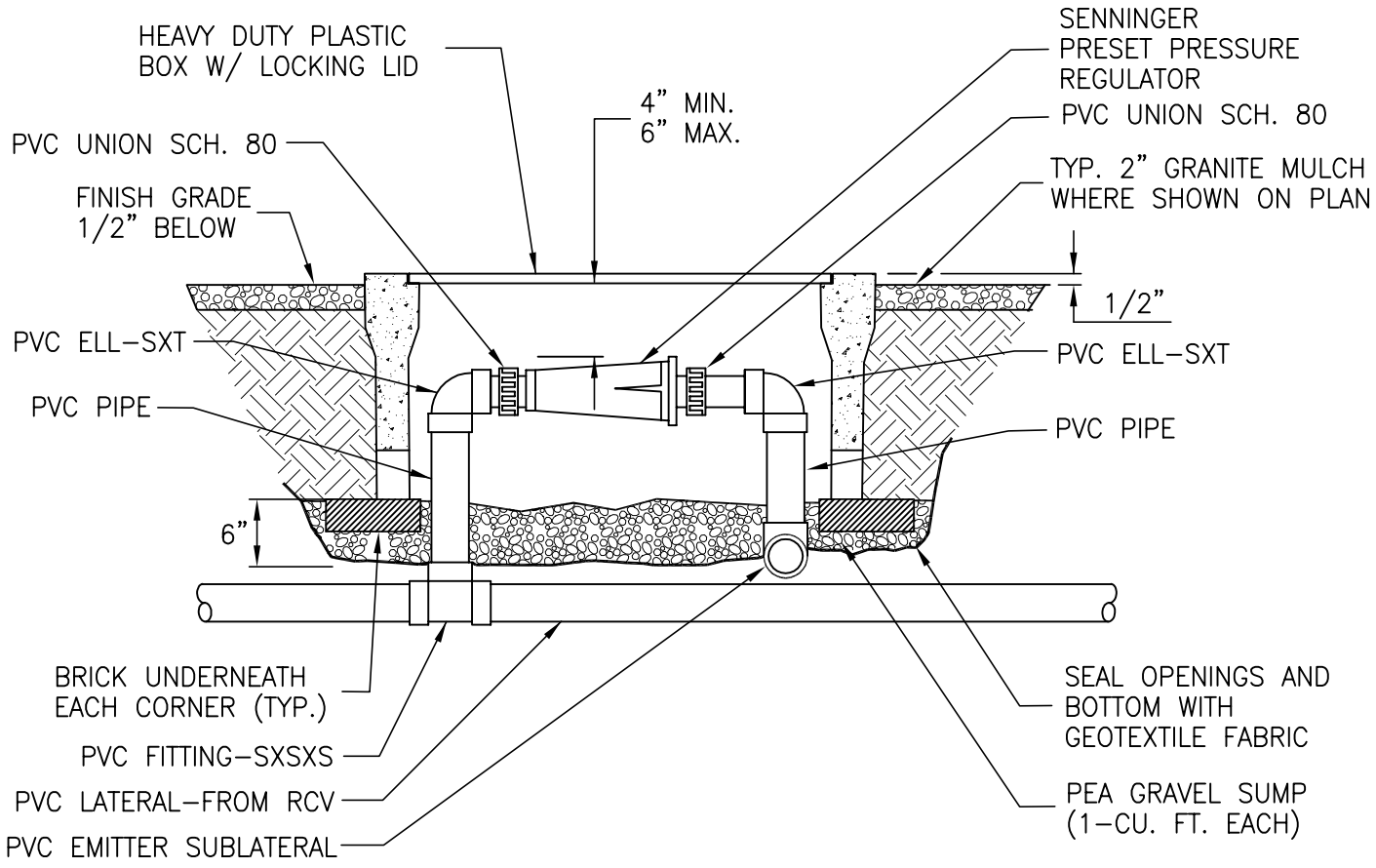

ALL PIPE SCH. 40 EXCEPT SCH. 80 UNIONS

PRESSURE REGULATOR RISER

NTS

ISSUED:		STANDARD DETAIL		DETAIL NO.
		PRESSURE REGULATOR RISER		418
REVISED:				SHEET 1 OF 1